ISSN 2395-1621

Implementation of MPPT System Using 8051 Microcontroller for Solar Power Efficiency Improvement

#1Mr. Sulke Swapnil A., #2Mr.Potekar Suraj S., #3Mr. Karennawar Mahesh C., #4Mr.Saruk Sandeep K., #5Mr. Mallikarjun S. Nimbaragimath

1surajpotekar@gmail.com
4sandeepsaruk31@gmail.com
5msnmath38@gmail.com

#1234UG Students,Department of Electrical Engineering., ArvindGavali College of Engg.,Satara

#5Assistant Professor, Department of Electrical Engineering., ArvindGavali College of Engg.,Satara.

ABSTRACT

In the future, solar energy will be a very important energy source. Several studies suppose that more than 45% of the energy in the world will be generated by photovoltaic array. Now a days electricity demand is increased fossil fuel use is reduced by using renewable energy sources. Solar energy is one of the most promising energy sources in many applications, due to its safety and high reliability. The output of solar panel changes with respect to solar irradiation and temperature. There are number of methods used for improving efficiency of solar panel. In our proposed system, we use the constant voltage method. In this paper digital technique based on 8051 microcontroller is used to design and implement by using MPPT methods. In this method buck boost converter is used to control and maintain voltage level. In proposed MPPT consist of 1) solar panel 2) Buck boost converter 3) the control unit and calculation of maximum power point based on 8051 microcontroller. The main purpose of this system is to obtain maximum power from Photovoltaic (PV) cell under different atmospheric conditions.

Keywords : Solar PV system, MPPT, 8051 microcontroller, Dc-Dc converter, Constant voltage algorithm, Sensors, Battery.

ARTICLE INFO

Article History

Received: 25th March 2017

Received in revised form : 25th March 2017

Accepted: 25th March 2017

Published online : 4th May 2017

I. INTRODUCTION

In modern days use of electrical energy increases easy fuel oil, gas etc That will empty in source one day so, need to renewable energy source .For instance wind, thermal, biomass, solar energy are some example of renewable energy source .Solar energy is one of the most widely used for generating application .solar energy is long term for providing heat energy and electricity and which is unlimited available in nature [4].

This energy sources does not creates any pollution. The main advantage of solar system is minimum maintenance .In 2008, photovoltaic system which generate up to 5.56GW energy were installed [4] .The growth of PV system increased by 1.5 times as compared to previous year. Output power of solar panel depends on temperature and load impedance the V-I characteristics of PV panel is highly non linear due to temperature variance [4].

The buck boost converter which is used to step-up and down the output voltage. The output voltage is controlled by 8051 .the sensor are used for sensing the voltage and current variation in solar panel. The lead acid storage battery used to store energy. The microcontroller based designs are able to provide more accurate control and increased efficiency of system [3].

II. PROPOSED METHODOLOGY

The objective of this paper is to present cost effective and efficient microcontroller based MPPT system for solar system to ensure the max power point operation at all changing atmospheric condition

A. Block Diagram-

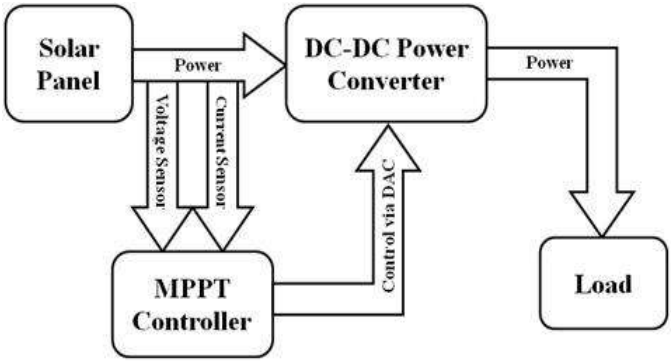

Figure 1: Block Diagram of MPPT System.

a. Solar Cell or panel

The solar cell is operated on principle of photovoltaic effect. The photovoltaic effect is a phenomenon in which solar energy is converted directly into electrical energy. A PV cell is made of silicon, which is purified melted and then crystallized [1]. The solar cell output voltage is proportional to temperature in Celsius. The scale factor is 0.01V/AC. The rating of solar panel is 12 watt,17 volt,0.71 Amp.

b. Microcontroller

The 8051 microcontroller is a key component of MPPT, which used to control and operation of whole system. The buck –boost converter controlled by microcontroller. The currents and voltages are measured by controller unit. It is responsible for reading number of sensors and controlling the circuitry used track the maximum power. The programming language of the microcontroller is easy to use and simple to understand. It has an in build ADC[5].

It is having some important Features such as 256 bytes of EEPROM data memory and self-Programming. It operates at 5V.

c. ADC (Analog to Digital Converter)

ADC is used to convert analog to digital signal, binary code to current, voltage or electric charge. This is used to convert the voltages read into the analogue pins to a decimal between 0 and 1023. The ADC0808, offers high Speed, high accuracy, minimal temperature dependence and repeatability, and consumes Minimum power [6].

d. ***DC-DC converter***

In DC-DC converter buck-boost converter is used to control the magnitude of voltage and current. A Boost converter is used to step up the input voltage resulting in a higher output voltage and a Buck converter is used to step down the input voltage resulting in a lower output voltage, while a Buck-Boost converter is used when the output voltage is required to be either higher or lower than the input voltage[7].

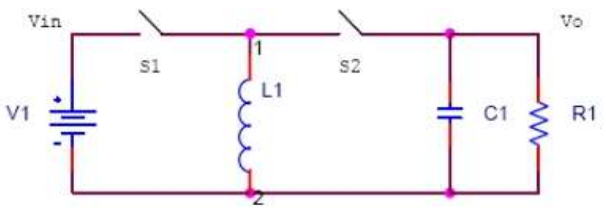

Figure 2: Buck boost converter.

e. Current Sensor (ACS712)

The sensor will measure the current provided by the solar panel. This current will also be put into the MPPT digital controller. This sensor can handle a current between -5A and +5A and it outputs the current as a voltage of between 0 and 5 volts corresponding to the measured current.

f. Voltage Sensor (LM358)

The voltage sensor is a simple voltage divider that steps down the voltage of the power amplifier to something between 0V and 5V, so that it can be fed into one of the analogue inputs of the Microcontroller. This will measure the voltage provided by the solar panel.

g. Battery

Lead acid storage battery is used to store the power. The rating of battery is 12 volt, 7A.

B. Working principle:-

MPPT is an indirect method of maximizing the efficiency at which the solar panels deliver electricity to an on-grid or off-grid scenario like charging a bank of batteries. The voltage, current, temperature and irradiance levels are sensed by the sensors. The DC-DC converter is responsible for optimizing the output voltage of the panel to match the required voltage level of battery. The DC-DC converter use the Buck-Boost converter because if the battery requires a lesser voltage from the panel the Buck converter reduces the voltage and if the battery requires more voltage the Boost converter boosts the voltage. Thus the utilization of maximum power from the panel is done effectively [6].

The current, voltage, temperature from the panel and the current and voltage from the DC-DC converter are sensed by the sensors and are given to microcontroller. The microcontroller is pre programmed to always output maximum power by using constant voltage method. Thus the battery is always charged at maximum power[7].The battery is connected to the inverter where AC to DC conversion takes place. The AC power is utilized for household applications or is sent to grid for commercial purpose. The additional facility provided here is RS485 interface to the microcontroller. This helps to monitor the data from a remote place and also data logging.

C. Methods of MPPT:-

There are many methods used for maximum power point tracking a few are listed below.

- Perturb and Observe method
- Incremental Conductance method
- Constant Voltage method
- Constant Current method

Perturb and Observe method

This method is the most common. In this method very less number of sensors are used. The operating voltage is sampled and the algorithm changes the operating voltage in the required direction and samples dP/dV. If dP/dV is positive, then the algorithm increases the voltage value

towards the MPP until dP/dV is negative. This method is not suitable when the changes in the solar irradiation are high[4].

Incremental Conductance method

This method tracks rapidly changing irradiation conditions more accurately than P&O method. One drawback in this method is that it requires many sensors to operate and hence is economically less effective [4].

Constant Current method

This method is dependent on the relation between the open circuit current and the maximum power point current. The ratio of these two currents is generally constant for a solar cell, roughly around 0.95. Thus the short circuit current is obtained experimentally and the operating current is adjusted to 95% of this value [4].

Constant Voltage method

This method is similar to constant current algorithm. The ratio of these two voltages is generally constant for a solar cell, roughly around 0.76. Thus the open circuit voltage is obtained experimentally and the operating voltage is adjusted to 76% of this value.

If the output voltage is held constant, there is no attempt to track the maximum power point, so it is not a maximum power point tracking technique in a strict sense, though it does have some advantages in cases when the MPPT tracking tends to fail, and thus it is sometimes used to supplement an MPPT method in those cases [4].

Flow chart

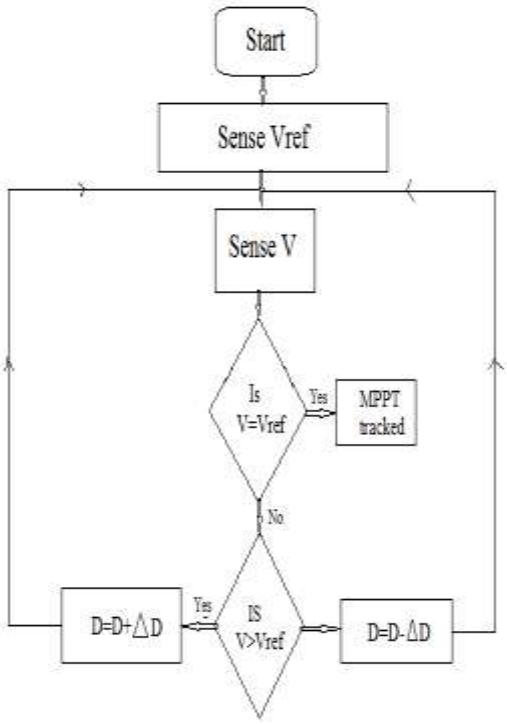

Figure 3: Flow chart of constant voltage method.

III. RESULT

The buck and boost converters are the most efficient technique for a given price, while voltage flexibility varies. The buck–boost converters are always at efficiency but at higher price.

The configurations of buck– boost are of a very low resistance, achieving efficiencies as regards input power higher than 95% and hardly 2 or 3% lower than the buck and boost converter.

The efficiency of mppt with different converter shown below-

Load	Without Converter (%)	Buck Converter (%)	Boost Converter (%)	Buck Boost Converter (%)
RL= 5Ω	88.5	97.2	91.2	99.9
RL= 20Ω	40.2	40.3	99.7	99.9

IV. CONCLUSION

Constant voltage method measurement of open circuit voltage of PV array is required. The efficiency of the solar panel is improved by using the maximum power point tracking technique in which the maximum power availability of the solar panel is tracked and maintain it in the Maximum Power Point.

By use of constant voltage method improves efficiency of solar power up to 8-15 % with respect other system. When there is change in the solar irradiation the maximum power point changes and thus the required duty cycle for the operation of the model also changes. But if constant duty cycle is used then maximum power point cannot be tracked and thus the system is less efficient.

REFERENCES

[1] S.Shanthini Merlin, “MPPT Based Improvement of Solar Power Efficiency Using Labview”, Assistant Professor, Dept. of EEE, Prathyusha Institute of Technology and Management, Thiruvallur, Tamilnadu, India Vol. 4, Issue 6, June 2015.

[2] Ramakrishna N, “Literature Review on Solar MPPT Systems”, Department of Electrical and Electronics Engineering, Amrita University, Amritanagar, Coimbatore, India. Volume 4, Number 3 (2014).

[3] Mugdha V.Patil, “An Efficient MPPT Solar Charge Controller”, PG Student [VLSI & Embedded], Dept. of E&TC, G S Moze COE, Pune, Maharashtra, India Vol. 3, Issue 7, July 2014.

[4] Pawan D. Kale, “A Study of Efficient Maximum Power Point Tracking Controlling Methods for Photovoltaic System”, Department of Electronics and Telecommunication College of Engineering, Amravati, India. Volume 3, Issue 3, March 2013.

[5] Museeb M. Jasim, “Microcontroller Based Maximum Power Point Tracking For Photovoltaic Solar Panel” , University of Mosul College of Electronics Engg. Volume 19, No.6, December 2011.

[6] A. Borni, "Study of a Photovoltaic System Using MPPT Buck-Boost Converter" , International Journal of Materials, Mechanics and Manufacturing, Vol. 3, No. 1, February 2015.

[7] V.C. Kotak, "DC To DC Converter in Maximum Power Point Tracker" , Associate Professor, Dept of Electronics Engineering, Shah &Anchor Kutchhi Engineering College, Mumbai, Vol. 2, Issue 12, DECEMBER 2013.

